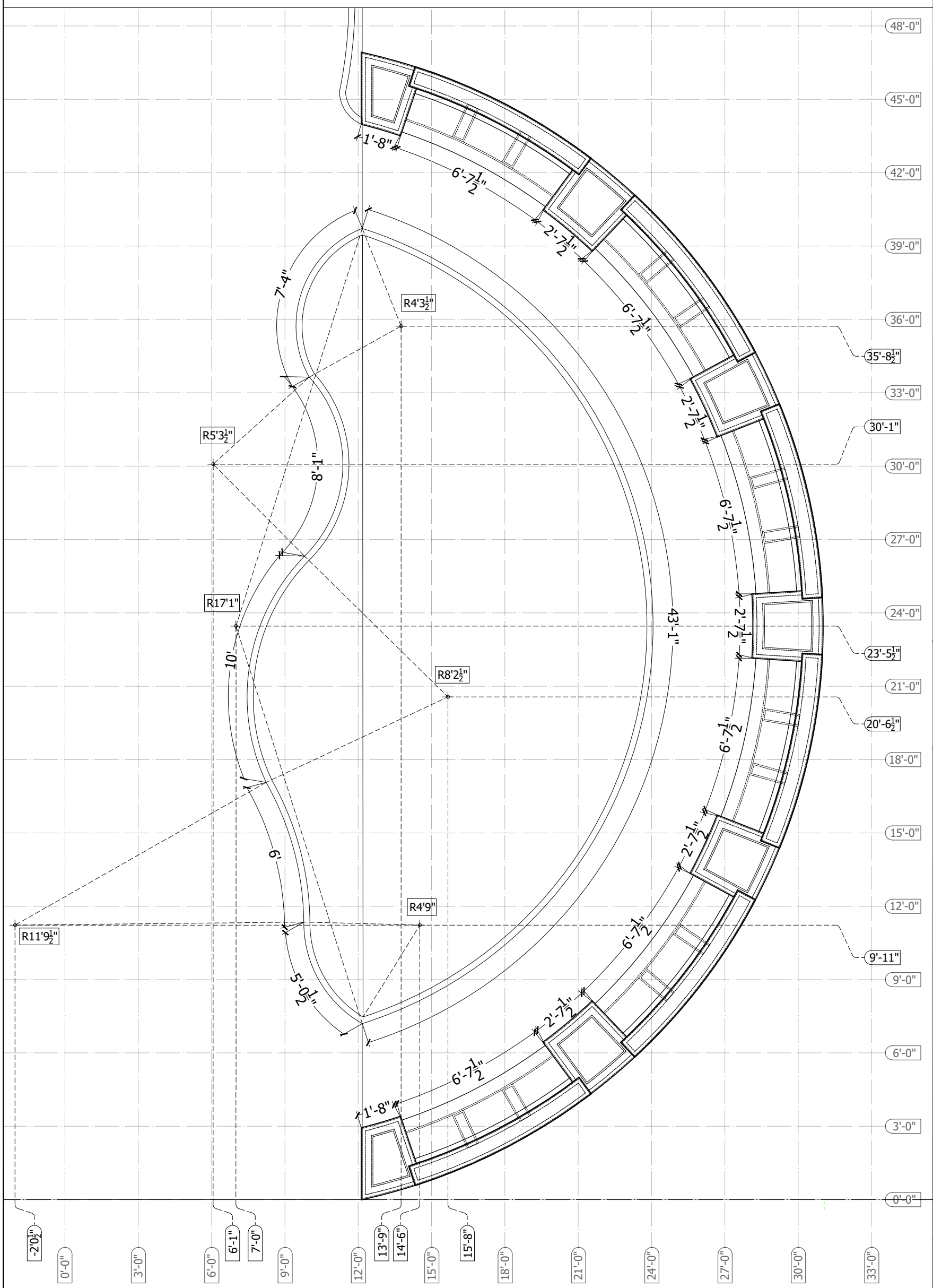

GENERAL NOTES

1. Drawings are schematic in nature and prepared for conceptual understanding and preliminary discussions only.
2. All dimensions shown are approximate and subject to verification during design development and detailed working drawings.
3. Do not scale drawings. Written dimensions shall take precedence.
4. Locations of walls, doors, windows, and fixtures are indicative and may vary in detailed design.
5. Structural design, MEP (Mechanical, Electrical, Plumbing), HVAC, and other services are shown in diagrammatic form only and are subject to coordination with consultants.
6. All statutory norms, building by-laws, NBC, fire safety codes, and local authority regulations shall be strictly adhered to during subsequent stages.
7. Materials, finishes, and specifications shown are illustrative and not final.
8. Drawings are not intended for construction. Issued only for client review, approvals, and preliminary cost estimates.
9. Final setting out, grid lines, and levels shall be based on site survey and structural consultant's input.
10. Any discrepancies found shall be immediately brought to the architect's notice before proceeding further.

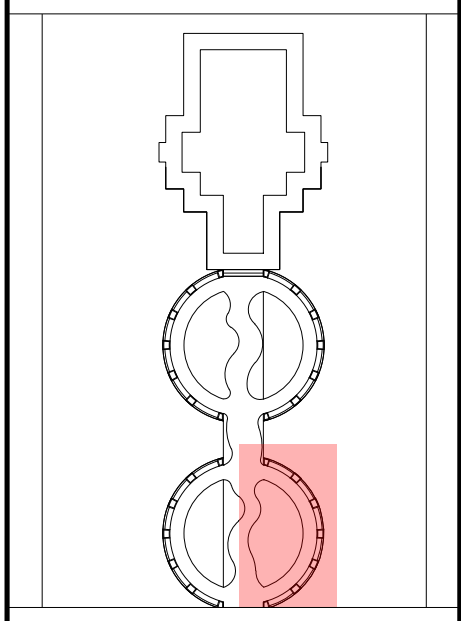

IMPORTANT NOTE

To be read in continuation with 0'0" (refer drawing no. 4)

PROJECT TITLE:-

HANUMAN JI TEMPLE

WORK ORDER NO.

PO/LNMIIT/PUR/2025-26/0106-R

CLIENT:-

LNM INSTITUTE OF INFORMATION TECHNOLOGY

PROPOSED BY:-

ZEROTH DIMENSION STUDIO

CHECKED BY:-	DESIGNED BY-
AR. MIITESH	AR. KRATI KEDAWAT
DATE:- 04-09-2026	DRAWN BY- PRIYANSHI AGARWAL
SHEET. NO:- 06	DRG. TITLE:- Landscape Settingout Plan Part C
REVISION:- 00	
NORTH N	AR. SIGN-
	CLIENT'S SIGN -